E-Series MOLD BASES

13⅜ x 15

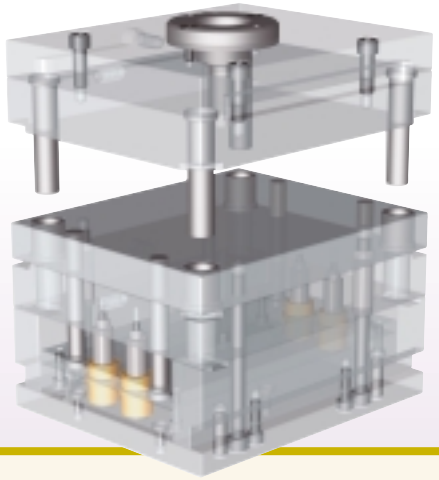

When ordering specify the following:
- Catalog number: **E1315**
- **A** plate thickness
- **B** plate thickness
- **O** sprue bushing orifice
- **R** sprue bushing radius
- Locating ring LR501 or LR504
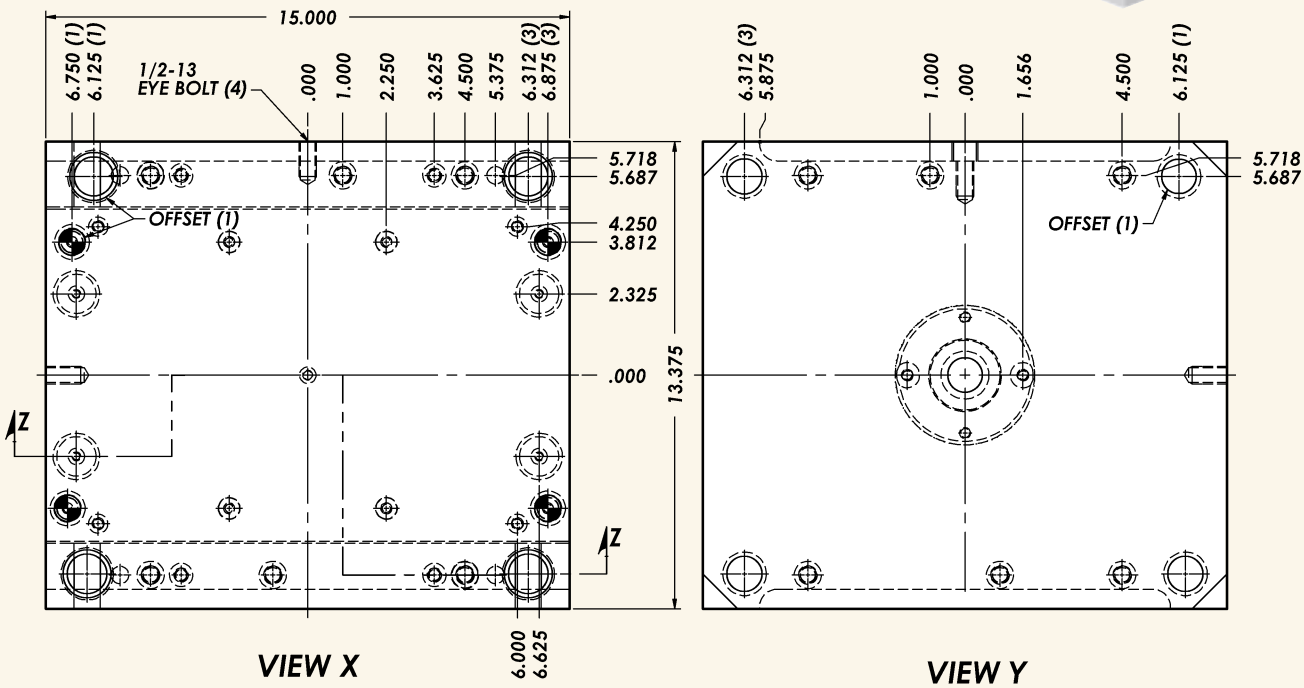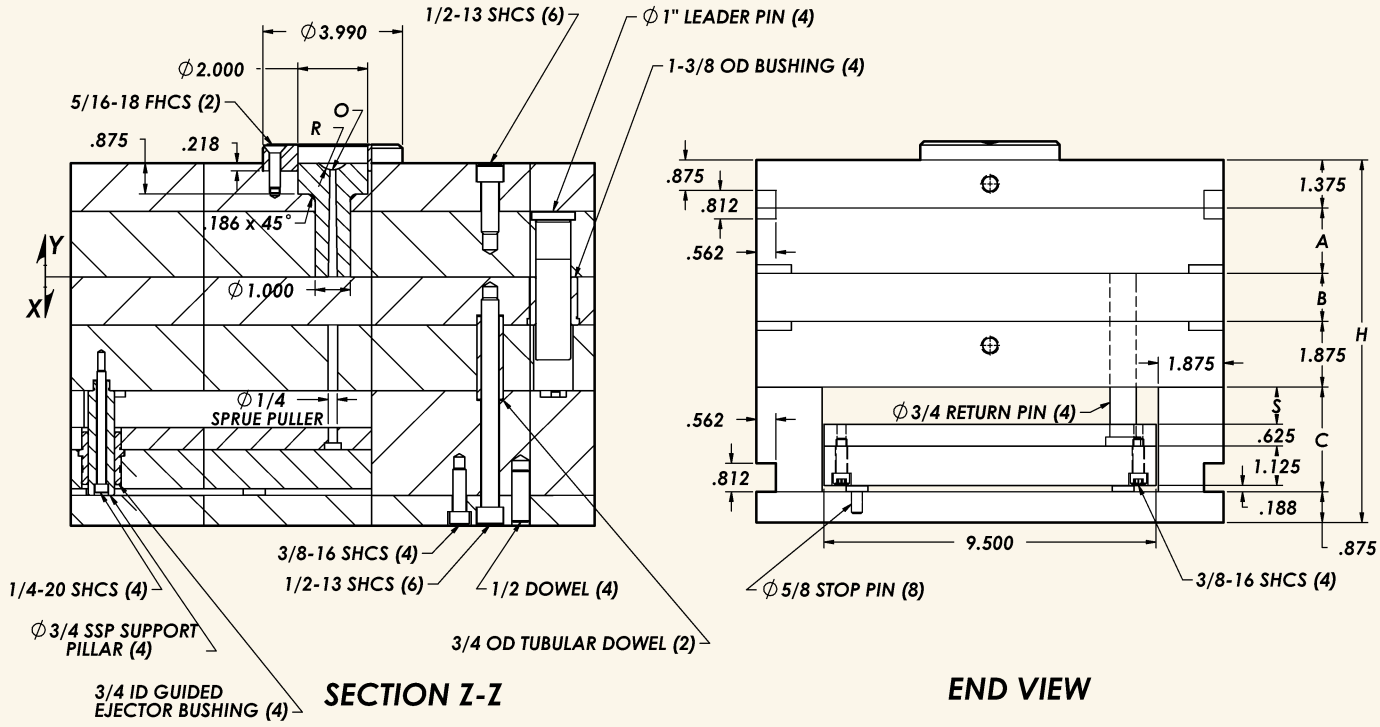
Example: E-1315-1717 O=7/32 R=1/2