E-Series MOLD BASES

10⅞ x 12

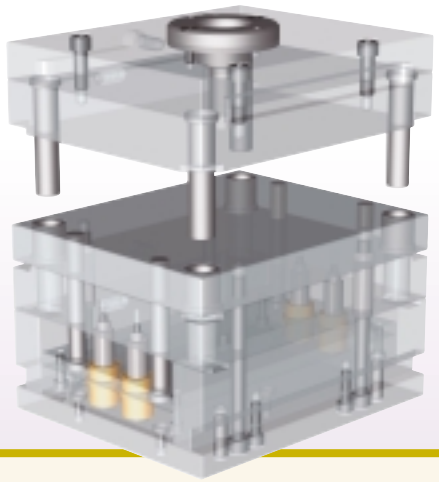

When ordering specify the following:
- Catalog number: **E1112**
- **A** plate thickness
- **B** plate thickness
- **O** sprue bushing orifice
- **R** sprue bushing radius
- Locating ring LR501 or LR504

Example: E-1112-1717 O=7/32 R=1/2

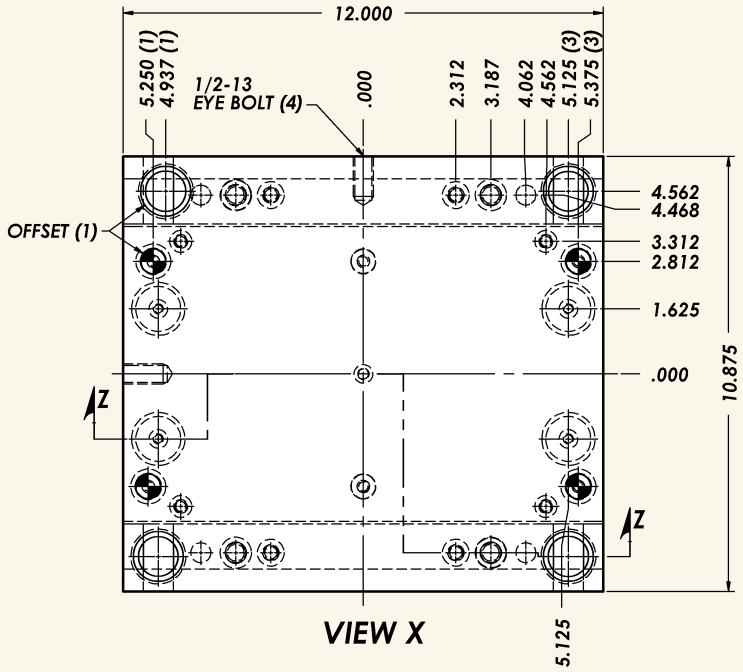

VIEW X

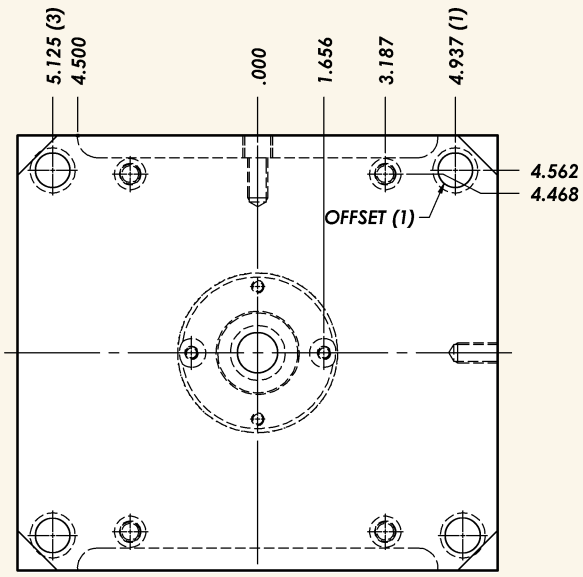

VIEW Y

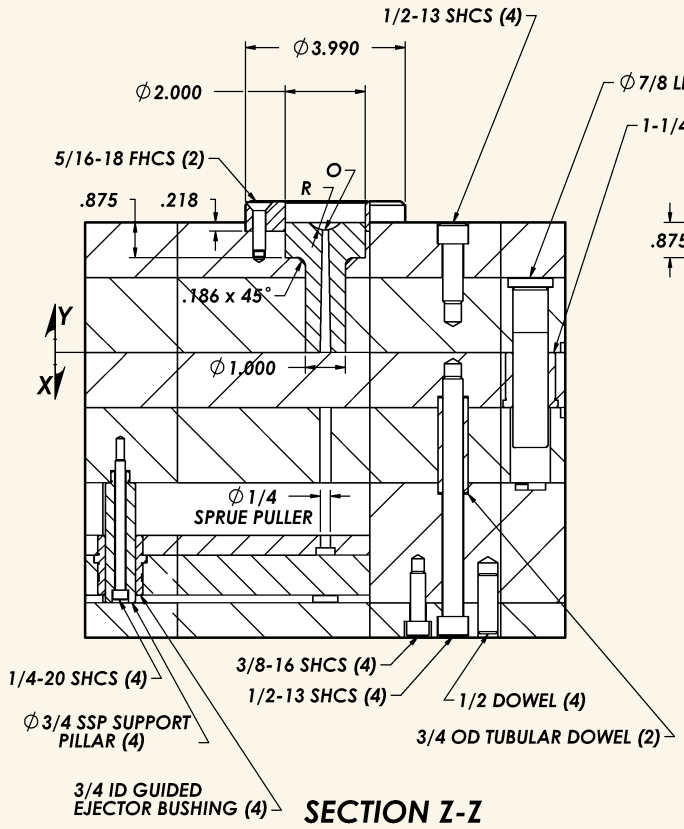

SECTION Z-Z

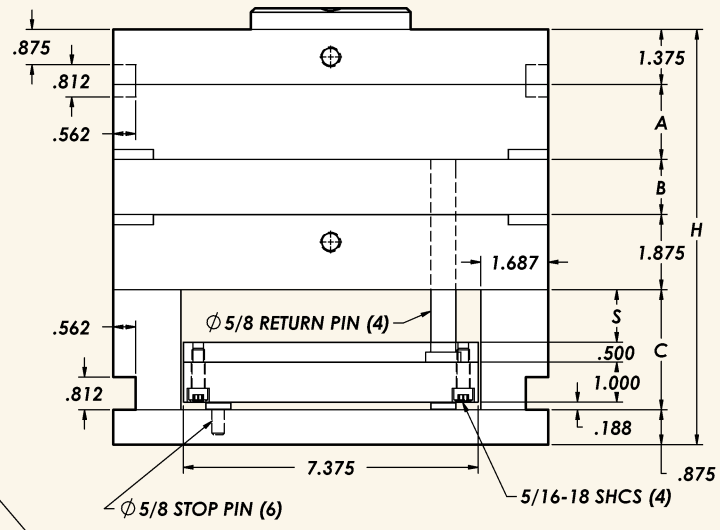

END VIEW