Leader Pins

Straight

3/4 - 1-1/4

General Dimensions and Tolerances				
Nominal Diameter	D +.0000 -.0005	PF +.0005 -.0000	H +.000 -.010	T +.000 -.005
3/4	.749	.751	.990	3/16
7/8	.874	.876	1.115	1/4
1"	.999	1.001	1.240	1/4
1-1/4	1.249	1.251	1.490	5/16

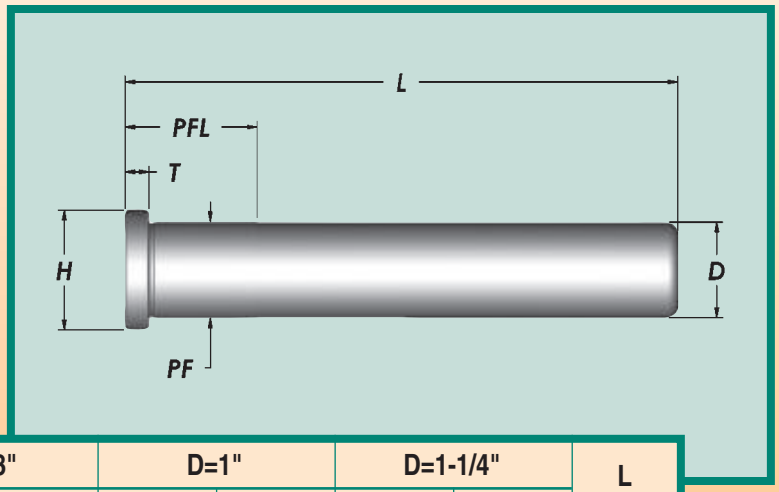

L	D=3/4"		D=7/8"		D=1"		D=1-1/4"		L
	PFL	Cat. No.	PFL	Cat. No.	PFL	Cat. No.	PFL	Cat. No.	
1-3/4	7/8	1000	7/8	1099	7/8	1198			1-3/4
2-1/4	7/8	1001	7/8	1100	7/8	1199			2-1/4
2-3/4	7/8	1002	7/8	1101	7/8	1200	7/8	1300	2-3/4
3-1/4	7/8	1003	7/8	1102	7/8	1201	7/8	1301	3-1/4
3-3/4	7/8	1004	7/8	1103	7/8	1202	7/8	1302	3-3/4
4-1/4	1-3/8	1005	1-3/8	1104	1-3/8	1203	7/8	1303	4-1/4
4-3/4	1-3/8	1006	1-3/8	1105	1-3/8	1204	1-3/8	1304	4-3/4
5-1/4	1-3/8	1007	1-3/8	1106	1-3/8	1205	1-3/8	1305	5-1/4
5-3/4	1-7/8	1008	1-3/8	1107	1-3/8	1206	1-3/8	1306	5-3/4
6-1/4	1-7/8	1009	1-7/8	1108	1-3/8	1207	1-3/8	1307	6-1/4
6-3/4	1-7/8	1010	1-7/8	1109	1-7/8	1208	1-7/8	1308	6-3/4
7-1/4	1-7/8	1011	1-7/8	1110	1-7/8	1209	1-7/8	1309	7-1/4
7-3/4	1-7/8	1012	1-7/8	1111	1-7/8	1210	1-7/8	1310	7-3/4
8-1/4			1-7/8	1112	1-7/8	1211	1-7/8	1311	8-1/4
8-3/4			1-7/8	1113	1-7/8	1212	1-7/8	1312	8-3/4
9-1/4	1-7/8	1015			1-7/8	1213	1-7/8	1313	9-1/4
9-3/4					1-7/8	1214	1-7/8	1314	9-3/4
10-1/4					1-7/8	1215	1-7/8	1315	10-1/4
10-3/4			1-7/8	1117	1-7/8	1216	1-7/8	1316	10-3/4
11-1/4					1-7/8	1217	1-7/8	1317	11-1/4
11-3/4					1-7/8	1218	1-7/8	1318	11-3/4
12-1/4			1-7/8	1120	1-7/8	1219	1-7/8	1319	12-1/4
12-3/4							1-7/8	1320	12-3/4
13-3/4							1-7/8	1322	13-3/4
14-3/4							1-7/8	1324	14-3/4
15-3/4							1-7/8	1326	15-3/4
NEW 24					1-7/8	LP1x24	1-7/8	LP1-1/4x24	24